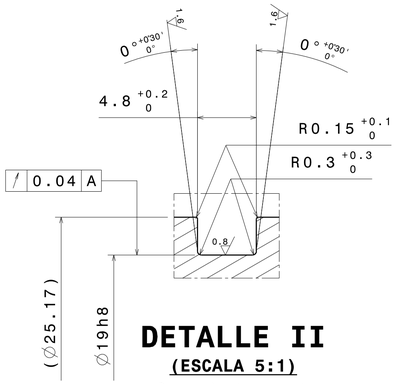

DETALLE II
(ESCALA 5:1)
DETAIL II
(SCALE 5:1)

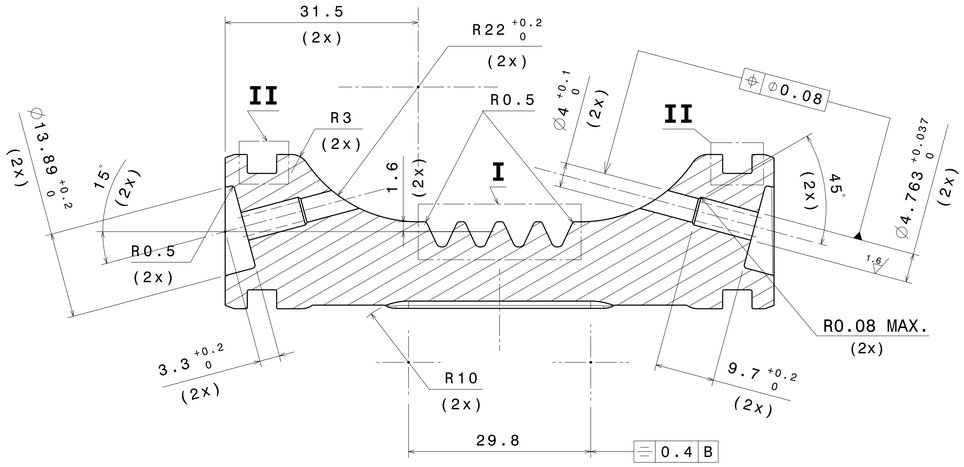

SECCION B-B
SECTION B-B

3-7
B

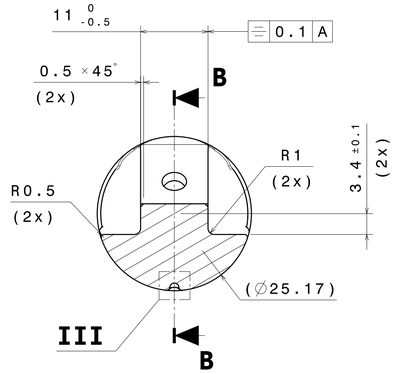

SECCION A-A
SECTION A-A

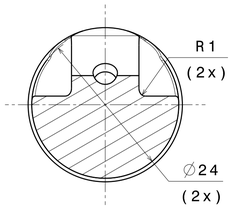

SECCION C-C
SECTION C-C

NOTAS:

1.- RADIOS DE FONDO NO ACOTADOS = 0.2 / 0.4.

2.- REDONDEAR ARISTAS VIVAS CON R = 0.2 / 0.4.

3.- TOLERANCIAS DE FORMA Y POSICION SEGUN DIN 7184.

4 TRATAMIENTO TERMICO "TN140" SEGUN I+D-P-225 E I+D-M-180. RESISTENCIA 1400 / 1550 MPa.

- NITRURAR TODA LA PIEZA, EXCEPTO LA SUPERFICIE MARCADA CON " - - - - - - - - - " SEGUN I+D-P-218, TIPO3, CLASE B, PARA CONSEGUIR UNA DUREZA SUPERFICIAL MINIMA DE 850Hv. Y UN ESPESOR MINIMO DE 0.45 mm.
- DESPUES DEL NITRURADO QUITAR CAPA BLANCA SEGÚN EP-218 ANEXO II (PROCESO WP-432 DE LUCAS AEROSPACE)

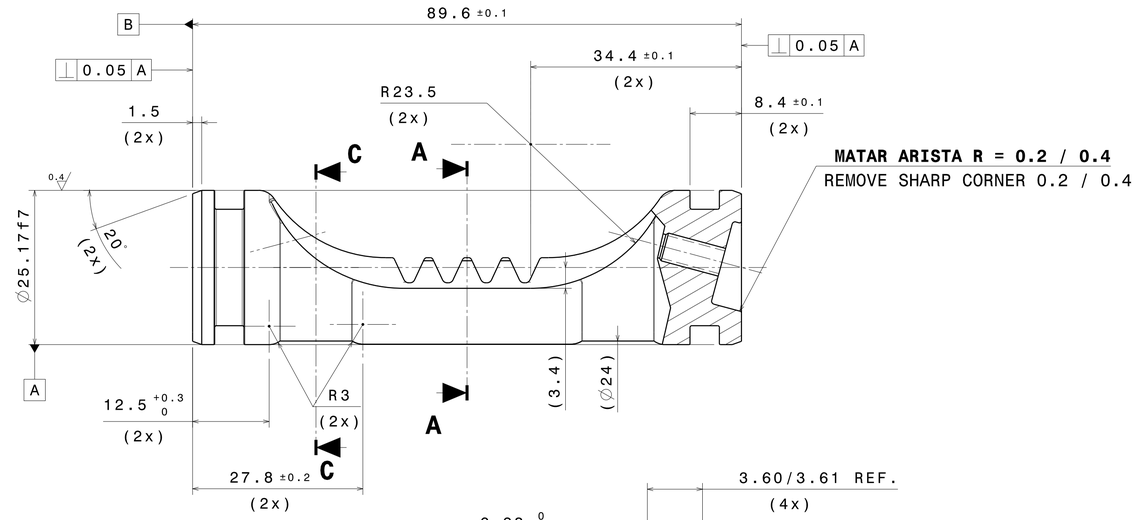

NOTES:

1.- UNSPECIFIED RADII OF DEPTH = 0.2 / 0.4.

2.- REMOVE SHARP CORNERS WITH R = 0.2 / 0.4.

3.- GEOMETRIC AND POSITION TOLERANCES AS PER DIN 7184.

4 HEAT TREATMENT "TN140" ACCORDING TO I+D-P-225 AND I+D-M-180. STRENGTH 1400 / 1550 MPa.

- NITROGEN-HARDENING ON ALL SURFACES, EXCEPT SURFACES MARKED THUS " - - - - - - - - - " ACCORDING TO I+D-P-218, TYPE 3, CLASS B, TO OBTAIN MINIMUM HARDENSS OF 850 Hv. AND A MINIMUM THICKNESS OF 0.45 mm.
- AFTER NITROGEN-HARDENING REMOVE WHITE LAYER AS PER EP-218 ANNEX II (PROCESS WP-432 OF LUCAS AEROSPACE).

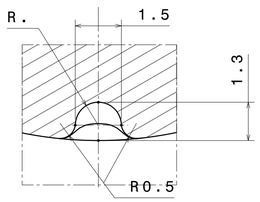

DETALLE III
(ESCALA 10:1)
DETAIL III
(SCALE 10:1)

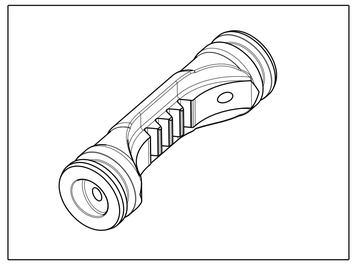

(ESCALA 1:1)
(SCALE 1:1)

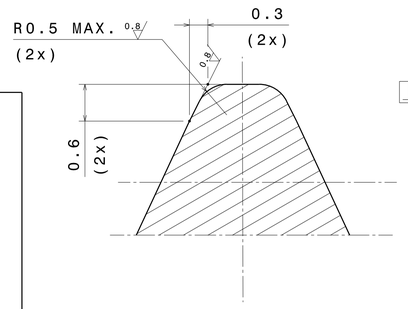

DETALLE IV
(ESCALA 20:1) (3x)
DETAIL IV
(SCALE 20:1)

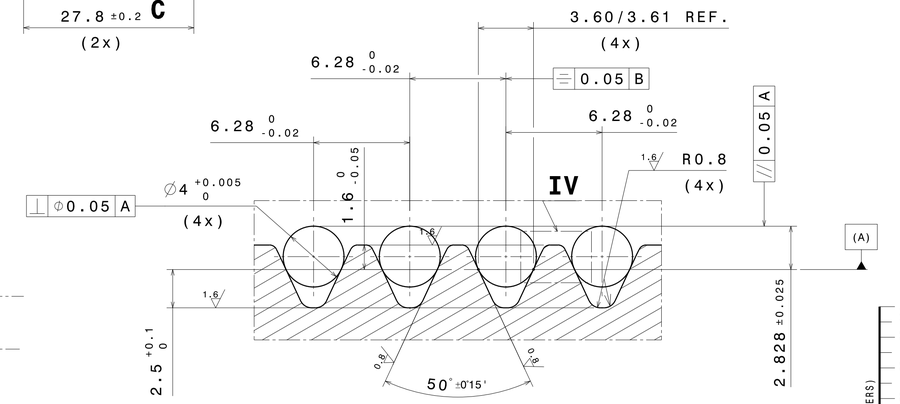

DETALLE I
(ESCALA 5:1)
DETAIL I
(SCALE 5:1)

DFF PA

4 40CDV12 T140	0.199kg	AIR9160/C

PROJECTION | IDENTIFICATION of the PART (WRKZK) per SCDM (Rem is inclusion)

TOLERANCE NOT STATED

DIMENSION	GEOMETRIC		
ISO2768-m-H	ISO11101	EDGES Round Off R = 0.2 ≡ 0.4	FILLET RADIUS R = 0.2 ≡ 0.4

SURFACE ROUGHNESS (Ra) ISO1302: 3.2 (1.6 0.8 0.4)

Class as per EC0044: 03

IDENTIFY as per EC0044 (NO or BATCH or S/N): NO

TITLE: PISTON (PISTON)

Scale 2:1 (1:1) (5:1) (10:1) (20:1)

MILIMETROS (MILLIMETERS)

CESA Format A1